ALPHA MICROSYSTEMS
RIGHT. FROM THE START

Roadrunner 030 and 040

AM-2000 6-slot VME Upgrade Installation Instructions

PDI-00172-45, Rev. A00

© 1995 Alpha Microsystems

REVISIONS INCORPORATED	
REVISION	DATE
A00	July 1994

Roadrunner 030 and 040 AM-2000 6-slot VME Upgrade Installation
To re-order this document, request part number PDI-00172-45.

The information contained in this manual is believed to be accurate and reliable. However, no responsibility for the accuracy, completeness or use of this information is assumed by Alpha Microsystems.

This document was written and illustrated by Dan Twaddell.

This document may contain references to products covered under U.S. Patent Number 4,530,048.

The following are registered trademarks of Alpha Microsystems, Santa Ana, CA 92799:

AMIGOS	AMOS	Alpha Micro	AlphaACCOUNTING
AlphaBASIC	AlphaCALC	AlphaCOBOL	AlphaFORTRAN 77
AlphaLAN	AlphaLEDGER	AlphaMAIL	AlphaMATE
AlphaNET	AlphaPASCAL	AlphaRJE	AlphaWRITE
CASELODE	OmniBASIC	VER-A-TEL	VIDEOTRAX

The following are trademarks of Alpha Microsystems, Santa Ana, CA 92799:

AlphaBASIC PLUS	AlphaVUE	AM-PC	AMTEC
DART	ESP	MULTI	inSight/am
inFront/am			

All other copyrights and trademarks are the property of their respective holders.

ALPHA MICROSYSTEMS
3511 Sunflower
P.O. Box 25059
Santa Ana, CA 92799

TABLE OF CONTENTS

1.0 INTRODUCTION 1

2.0 GENERAL PRODUCT DESCRIPTION 2
- 2.1 Features 2
- 2.2 Environmental Specifications 3
- 2.3 Power Specifications 3

3.0 MECHANICAL REQUIREMENTS 3

4.0 COMPATIBILITY 3
- 4.1 Software Compatibility 4
- 4.2 Hardware Compatibility 4

5.0 ROADRUNNER SCSI TAPE AND HARD DISK DRIVE REQUIREMENTS 5
- 5.1 Tandberg 1/4" Streaming Tape Drives 5
- 5.2 AM-645 8mm Magnetic Tape Subsystem 7
- 5.3 AM-647 DAT Magnetic Tape Subsystem 7
- 5.4 SCSI Hard Disk Drives 7

6.0 SCSI DISPATCHER 9

7.0 UPGRADING ROADRUNNER ON-BOARD MEMORY 9
- 7.1 Installing Memory 10

8.0 CONFIGURING ROADRUNNER AND AM-986 BOARDS 12
- 8.1 Roadrunner AM-172 Board Configuration 12
- 8.2 Roadrunner AM-174 Board Configuration 13
- 8.3 Boot PROM Removal and Installation 14
- 8.4 AM-986 Configuration 15

9.0 INSTALLING THE AM-986 BOARD 16

10.0 INSTALLING YOUR ROADRUNNER BOARD 19

11.0 34-PIN X-BUS CABLING PRECAUTIONS 20
11.1 AM-986 to Roadrunner 34-Pin X-bus Cabling Instructions 21
11.2 Connecting the 50-Pin SCSI Interface Cable 23
11.3 Connect DC Power Cable to the Roadrunner Board 24

12.0 BOOTING THE NEW ROADRUNNER HARDWARE 24

13.0 INITIAL SYSTEM TESTING 24

14.0 OPERATIONAL NOTES 25

15.0 ROADRUNNER LOGO 28

16.0 ADDITIONAL DOCUMENTATION 29

APPENDIX A - SCSI TERMINATION
A.1 SCSI TERMINATION USING EXTERNAL TERMINATOR OPTION A-1
A.1.1 Termination Procedure (Without External Terminator) A-2
A.2 TERMINATOR POWER A-3

APPENDIX B - READ-AHEAD AND WRITE BUFFERING
B.1 INTRODUCTION B-1
B.2 READ AHEAD B-2
B.2.1 Controlling Read-Ahead B-2
B.3 WRITE BUFFERING FOR SCSI-1 AND SCSI-2 DISK DRIVES B-3
B.3.1 Potential Pitfalls B-3
B.3.2 Setting Up Write Buffering B-4
B.4 FINAL NOTES B-5

APPENDIX C - ROADRUNNER SOFTWARE CONFIGURATION
C.1 PREPARING FOR A ROADRUNNER UPGRADE C-1
C.1.1 Protecting Your Data C-1
C.1.2 Warm Boot Ability C-2
C.1.3 Booting from a Floppy Drive C-2
C.1.4 Upgrading Your AMOS Operating Software C-2
C.1.5 Preparing the Software to Boot from the Roadrunner Hardware C-4
C.1.6 Roadrunner Installation Checklist C-6

APPENDIX D - ROADRUNNER AM-174 PROGRAMMING INFORMATION
D.1 ROADRUNNER AM-174 PROGRAMMING INFORMATION D-1
D.1.1 The Problem and Why It’s A Problem D-1
D.1.2 What You Must Do.. . . . . D-2
D.1.3 One More Caution D-3
D.1.4 New Cache Control Program D-3

1.0 INTRODUCTION

The Roadrunner product kit described in this document is designed for upgrading Alpha Micro's AM-2000 VME computer. There are two types of Roadrunner boards available: the MC68EC030 based AM-172 board and the MC68040 based AM-174 board. Your product installation kit includes one Roadrunner board (AM-172 or AM-174), one AM-986 board, two 34-pin cables, and all necessary mounting hardware.

With a Motorola MC68EC030 or MC68040 CPU, integral high performance SCSI interface, and memory expansion up to 64 megabytes, Roadrunner provides incredible power and easy installation. Simply update your operating system, install the Roadrunner hardware into your computer, and you're ready to take advantage of a whole new level of performance.

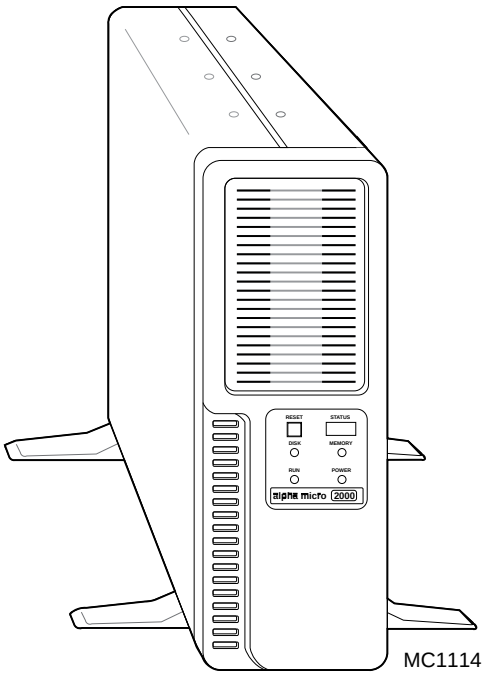

AM-2000M Pedestal Computer Enclosure

ESDI and ST-506 disk drives are not supported in AM-2000 computers upgraded with Roadrunner hardware.

The instructions for installing an AM-172 (030 based) or AM-174 (040 based) Roadrunner board are almost identical. The only significant difference is the installation of the two 34-pin X-bus cables. However, with the exception of the X-bus cabling instructions, most of the instructions in this document simply refer to the "Roadrunner board," which indicates the instructions are applicable to both the 030 and 040 Roadrunner boards.

Depending on your order, some SCSI disk drives are factory loaded with a bootable copy of Roadrunner compatible AMOS software. If you ordered a SCSI disk drive without the factory loaded software or if you choose to use your existing drive, you will need to download and configure a Roadrunner compatible AMOS operating system using the instructions found in Appendix C at the end of this document.

2.0 GENERAL PRODUCT DESCRIPTION

This section outlines Roadrunner's basic features and specifications.

2.1 Features

The features list is divided into three categories: features unique to the AM-172 (MC68EC030 based) Roadrunner board; features unique to the AM-174 (MC68040 based) Roadrunner board; and general features applicable to both boards.

1. AM-172 Specific features:

    a. MC68EC030 CPU.

    b. 40MHz clock rate.

    c. 256-byte internal cache memory.

    d. One on-board (SIMM) **s**ingle **i**nline **m**emory **m**odule expansion slot, which supports 4, 8, 16, and 32 megabyte 70ns DRAMs.

2. AM-174 Specific features:

    a. MC68040 CPU.

    b. 33MHz or 40MHz bus clock rate (depending on model).

    c. 66MHz or 80MHz CPU clock rate (depending on model).

    d. 4KB internal instruction cache

    e. 32KB external cache.

    f. One on-board (SIMM) **s**ingle **i**nline **m**emory **m**odule expansion slot, which supports 4, 8, 16, 32, and 64 megabyte 70ns DRAMs.

3. Features applicable to both Roadrunner boards:

    a. 32-bit bidirectional data path.

b. 32-bit address path.

c. Seven interrupt levels with vector capability.

d. DMA channel capability.

e. On-board bootstrap PROM containing several boot routines that enable you to change the I/O device the computer boots from. Also contains full power-up self-test of various system features.

f. On-board high performance SCSI expansion interface, which supports both SCSI-1 and SCSI-2 peripherals.

2.2 Environmental Specifications

Computer operating temperature external	60 to 80 degrees F (16 to 27 degrees C)
Humidity	10% to 90% (non-condensing)

2.3 Power Specifications

DC power requirements (maximum):

Board	**Current Draw**
AM-172	1.6 A
AM-174	2.9 A
AM-986	200 ma

3.0 MECHANICAL REQUIREMENTS

The Roadrunner product kit included with this document is mechanically compatible with all versions of the AM-2000 6-slot pedestal computer.

Once the Roadrunner hardware is installed, the VME slot just above the CPU board will no longer be accessible. However, because Roadrunner has its own on-board memory, you will have at least one extra vacant slot based on the removal of your AM-730 or AM-740 memory board.

4.0 COMPATIBILITY

The next two sections on Roadrunner hardware and software compatibility are important and should be carefully read before proceeding with your installation.

4.1 Software Compatibility

For information on third party software compatibility, see the Roadrunner SIG (Special Interest Group) located on Alpha Micro's online AMTEC+. The Roadrunner SIG is also a valuable source of other Roadrunner related information.

In order to be Roadrunner 030 compatible, your AMOS operating system can be no earlier than AMOS PR5/94 1.4C or AMOS PR5/94 2.2C. The Roadrunner 040 board has the same operating system requirements as the 030 board; however, for the PR5/94 AMOS releases, you must also download the Product Support Software Kit designed to support the Roadrunner 040 board. PR11/94 and later AMOS releases will include Roadrunner 040 support as part of the main release.

If you are installing an AM-174 Roadrunner 040 board, Appendix D contains some important programming information related to the use of self-modifying code and the Roadrunner 040's large 4KB instruction cache. All Roadrunner 040 users should carefully read the information in Appendix D before running third party application programs.

4.2 Hardware Compatibility

In order to function with the AM-986 board, your AM-172 board must be at revision A06 (or later) or B03 (or later). All versions of the AM-174 board are AM-986 compatible.

To be compatible with Roadrunner hardware, other circuit boards in your computer need to meet minimum revision level requirements. These minimum revision requirements are listed below for each board which is compatible with a Roadrunner enhanced AM-2000 computer:

Controller Boards

1. AM-630 VCR controller — Revision B07/C05
2. AM-212 floppy controller. — Revison A04

AM-355 I/O Bus Compatible Paddle Boards

1. AM-333 RJE paddle boards — Revision A00
2. AM-355 6-port serial I/O boards — Revision A00/B00

3. AM-358 8-port serial I/O boards Revision C01

4. AM-324 parallel printer board Revision A08

AM-520, AM-515, AM-730, and any other VME boards which do not appear in the above list are not compatible with the Roadrunner enhanced AM-2000 computer.

5.0 ROADRUNNER SCSI TAPE AND HARD DISK DRIVE REQUIREMENTS

Roadrunner has an on-board high performance SCSI interface incorporated into its design. To insure a successful installation, you should carefully read the next few sections dealing with SCSI peripherals and Roadrunner compatibility.

The Roadrunner's on-board high performance SCSI interface supports both SCSI-1 and SCSI-2 hard disk and magnetic tape devices. However, because of the potential increase in performance, we highly recommend the use of SCSI peripherals that support SCSI-2.

5.1 Tandberg 1/4" Streaming Tape Drives

In order to warm boot from a Tandberg tape drive, it must be set to a higher numerical SCSI ID (1 through 6) than any other tape device connected to the SCSI bus.

1. In order to be Roadrunner compatible, the AM-625 Tandberg 150MB tape drive must have firmware at **revision -06:00 or later**. You can use the SCSI.LIT program (included in AMOS 2.2C and 1.4C operating system releases) to determine the firmware revision of your tape drive. Simply type in the command SCSI at the AMOS prompt and the program will display a string of numbers which includes the firmware revision. The AM-625 is a SCSI-1 device; it cannot be upgraded to SCSI-2. AM-625 backups are not able to span tapes.

2. AM-626 525MB Tandberg SCSI tape drives can be upgraded to SCSI-2 by installing updated firmware (part number PDB-00626-90). If you did not include updated AM-626 firmware with your order, you can order the PROM separately from Alpha Micro. If the firmware is not upgraded, the drive can still be used with Roadrunner hardware as a SCSI-1 device, but only if it has firmware at **revision -04:08 or later.** You can use the SCSI.LIT program (included in AMOS 2.2C and 1.4C operating system releases) to determine the firmware revision of your tape drive. Simply type in the command SCSI at the AMOS prompt and the program will display a string of numbers which includes the firmware revision.

   To install the firmware PROM, you simply remove the two TORX screws holding the drive's top cover in place; lift off the top cover; gently pry out the old PROM; and install the new PROM. The illustration below shows the location of the AM-626's firmware PROM:

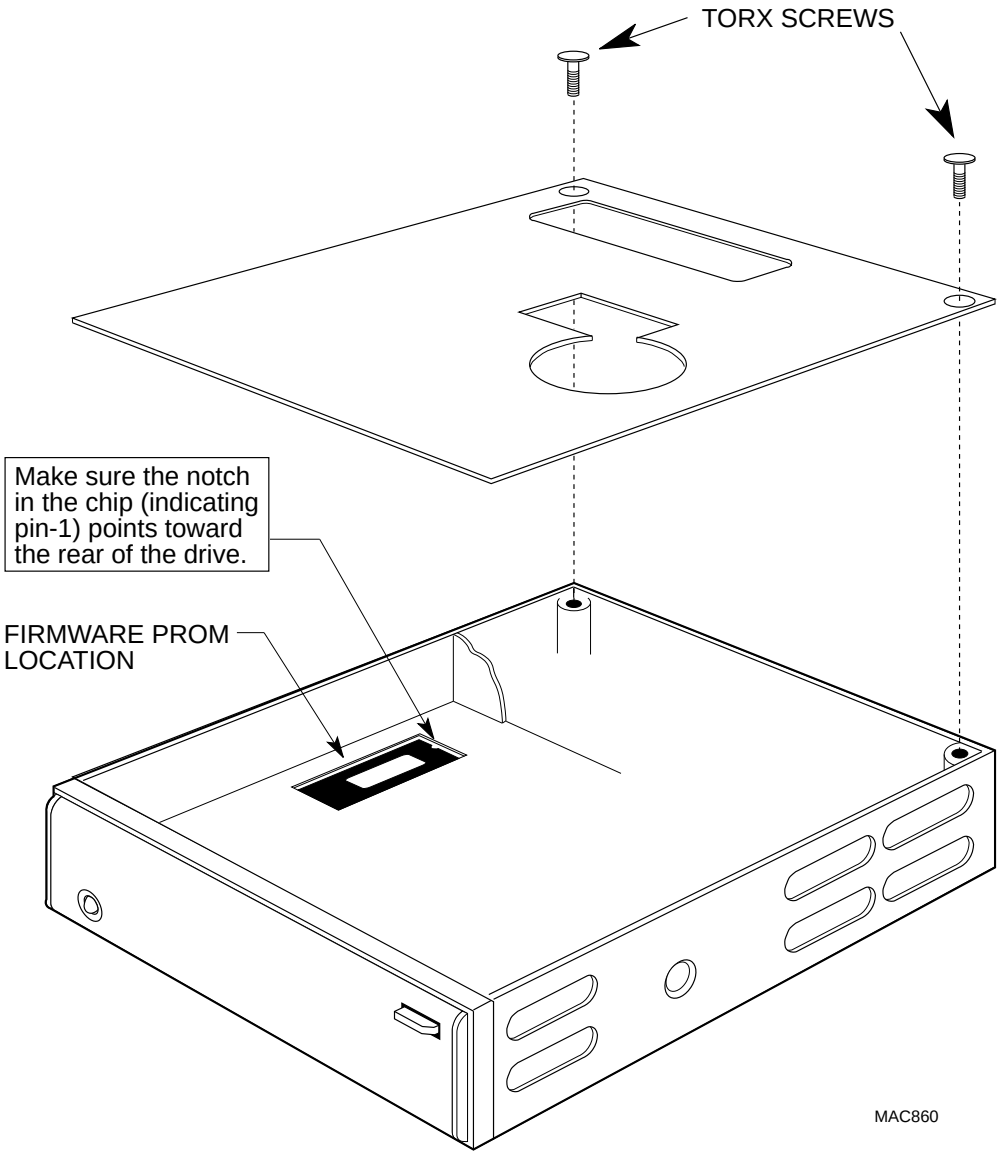

AM-626 PROM Installation

3. AM-627 1GB Tandberg SCSI tape drives also require a firmware update to be SCSI-2 compatible. However, these drives use a flash ROM for their firmware, which can be updated without removing the drive from the computer.

   Once the computer has completed booting, enter the following commands to update the tape drive firmware for SCSI-2 operation:

   LOG OPR: RETURN
   FWUPD DVR:TSCZ2 RETURN

The program will prompt you for the name of the device, enter:

STR0: RETURN

The firmware on the tape drive will automatically be updated for SCSI-2 operation; it takes about one minute and the AMOS prompt will re-appear. In order for the firmware update to take affect, you must power the computer down and then turn the power on again. With the computer up and running, your AM-627 tape drive will now be SCSI-2 compatible.

Once the firmware has been updated, the drive is only compatible with AM-4000 computers, AM-540 enhanced AM-3000M computers, and Roadrunner enhanced computers. If the drive is ever used in a configuration with an earlier style CPU board, the firmware must be converted back. To convert back to SCSI-1, follow the same procedure outlined above, but enter the command:

FWUPD DVR:TSCZ1 RETURN

5.2 AM-645 8mm Magnetic Tape Subsystem

In order for the Exabyte tape drive to work with the Roadrunner hardware, new firmware must be installed in the drive. The updated firmware is available from Alpha Micro under part number PDB-00645-90. Once the new firmware is installed, the Exabyte tape drive will operate in SCSI-1 mode only. The ability to span tapes is not supported on the Exabyte tape drive.

5.3 AM-647 DAT Magnetic Tape Subsystem

The DAT tape drive is SCSI-2 ready and does not require any firmware updates to be compatible with Roadrunner hardware. However, on the back of the DAT drive a change needs to be made to one of the configuration switches. Switch S4 must be placed in the "ON" position in order for the drive to operate in SCSI-2 mode.

After making the configuration switch change, you must turn the drive off and then power the drive back on in order for the switch change to take affect.

5.4 SCSI Hard Disk Drives

Depending on your order, your new SCSI drive may already be loaded with a Roadrunner compatible AMOS operating system. If this is the case, the drive will be clearly labeled indicating how it was configured.

In most cases, you will be attaching your SCSI peripherals to the high performance port on the Roadrunner board. However, the Roadrunner hardware also supports SCSI peripherals connected to the SASI port on the AM-180 board. If your configuration

includes a Tandberg tape drive, make sure the bootable hard disk and the tape drive are attached to the same bus. The configuration will not be functional if the tape drive is connected to the SASI port on the AM-180 board and the bootable disk drive is attached to the Roadrunner's SCSI port.

If you are installing a new SCSI drive, you may want to attach your existing SCSI drive to the SASI port so you can copy software on to your new SCSI drive attached to the Roadrunner SCSI port. If you are booting from the Roadrunner SCSI port and want to copy software from a drive connected to your computer's SASI port, the SCSI drive connected to the SASI port must be addressed to SCSI ID 1, 2, or 3. If the drive attached to the SASI port is addressed as 0, one of two things will happen; the computer will hang during the boot cycle; or if the SCSI drive connected to the SASI port has a properly configured bootable copy of AMOS, the computer will boot from the SASI port instead of the Roadrunner SCSI port. Also, you will need to create the appropriate driver using FIXLOG for the drive you are accessing as a subsystem device.

Maxtor LXT, MXT, and 7200 series SCSI disk drives supplied by Alpha Micro are supported for use on the Roadrunner's SCSI port. However, for use on your computer's SASI port, Maxtor MXT SCSI drives must have revision 1.5 firmware or later. Also, in order to be compatible with the Roadrunner hardware, your Maxtor MXT SCSI-2 compatible disk drive must have a sticker indicating it has special 6F+ firmware or it must be using 1.5 or later production firmware. Quantum LPS and Empire SCSI disk drives sold by Alpha Micro are also supported on the Roadrunner's SCSI port.

The boot PROM on the Roadrunner is programmed to look first at the SASI port on the AM-180 board. If a SCSI drive addressed as I.D.°0 is detected on the SASI port, it will be selected as the boot device. If no device is detected on the SASI port, the boot PROM will then check the Roadrunner's SCSI port for a device. If a SCSI drive addressed as I.D.°0 is detected on the Roadrunner board, it will be selected as the boot device.

The installation of Roadrunner hardware does not change the way your boot select switch works on your AM-180 board. The switch settings documented in your computer owner's manual are still valid.

Under AMOS 2.2 (or later) operating systems, you can divide your hard disk drive into logical devices larger than 32MB. In fact, you could take a 540MB drive and make it one giant 540MB logical. While this is perfectly acceptable, you may get a memory allocation error when running programs that load a copy of the bitmap into your memory partition—e.g., DSKANA and MONTST. To use these types of programs, you will need at least one job on your computer with enough memory allocated to allow you to load the large bitmap. Depending on the size of the logical device, you may need a memory partition between 100 and 800KB.

6.0 SCSI DISPATCHER

In order to use the Roadrunner's on-board high performance SCSI controller, you must define the "SCSI Dispatcher" in your system initialization command file. AMOS uses the dispatcher to communicate with the SCSI controller chip. All communications with the SCSI controller chip are handled by the dispatcher.

There are two versions of the SCSI dispatcher. SCZRR.SYS is a high performance SSD protected version of the SCSI dispatcher, which supports command queueing, synchronous transfers, multi-threaded, and scatter-gather operations. SIMRR.SYS is a simplified version of the SCSI dispatcher, which is not SSD protected and does not support the high performance features supported in SCZRR.SYS. SIMRR.SYS is used when making warm boot tapes and for temporary situations with computers which do not have an SSD chip; **it is not intended for normal operation**. While both of these dispatchers support SCSI devices, there is a tremendous performance increase using the SCZRR.SYS dispatcher.

The PIC code for the SCSI dispatcher must be purchased separately from Alpha Micro. See Appendix C for information on how to install the SCSI dispatcher and enter its SSD PIC code.

If you have any SCSI peripherals attached to the Roadrunner's SCSI port, you must define the dispatcher, regardless of whether you are using SCSI-1 or SCSI-2 peripheral devices.

7.0 UPGRADING ROADRUNNER ON-BOARD MEMORY

The Roadrunner has one on-board SIMM (single inline memory module) expansion slot, which supports 70ns DRAMs. SIMM memory is available in five sizes: 4, 8, 16, 32, and 64 megabytes. **The AM-172 board does not support the 64MB SIMM.**

SIMM expansion memory is sold individually under the following part numbers:

Part Number	Capacity
PFB-00711-04	4MB
PFB-00711-08	8MB
PFB-00711-16	16MB
PDB-00711-32	32MB
PDB-00711-64	64MB

7.1 Installing Memory

Special care must be taken when installing a SIMM module. The figure below shows how the curve in the SIMM module must align with pin-1 on the Roadrunner's SIMM connector.

The SIMM must be inserted into the connector at a slight angle and after you feel the SIMM module settle into the connector, you rotate the SIMM into an upright position, as shown in the illustration. When the SIMM is properly positioned, the metal retainer clips at each end of the connector will click into position, locking the SIMM in place.

Very little force is required to install a SIMM module. If you're having problems getting the SIMM module installed in the connector, stop and take a moment to examine both the SIMM module and the connector. Make sure you are installing the SIMM as shown in the illustration.

Once the memory is installed, you must set the memory configuration jumpers based on the capacity of the SIMM module. A table showing how these jumpers are configured is shown in the AM-172 and AM-174 Roadrunner board illustrations.

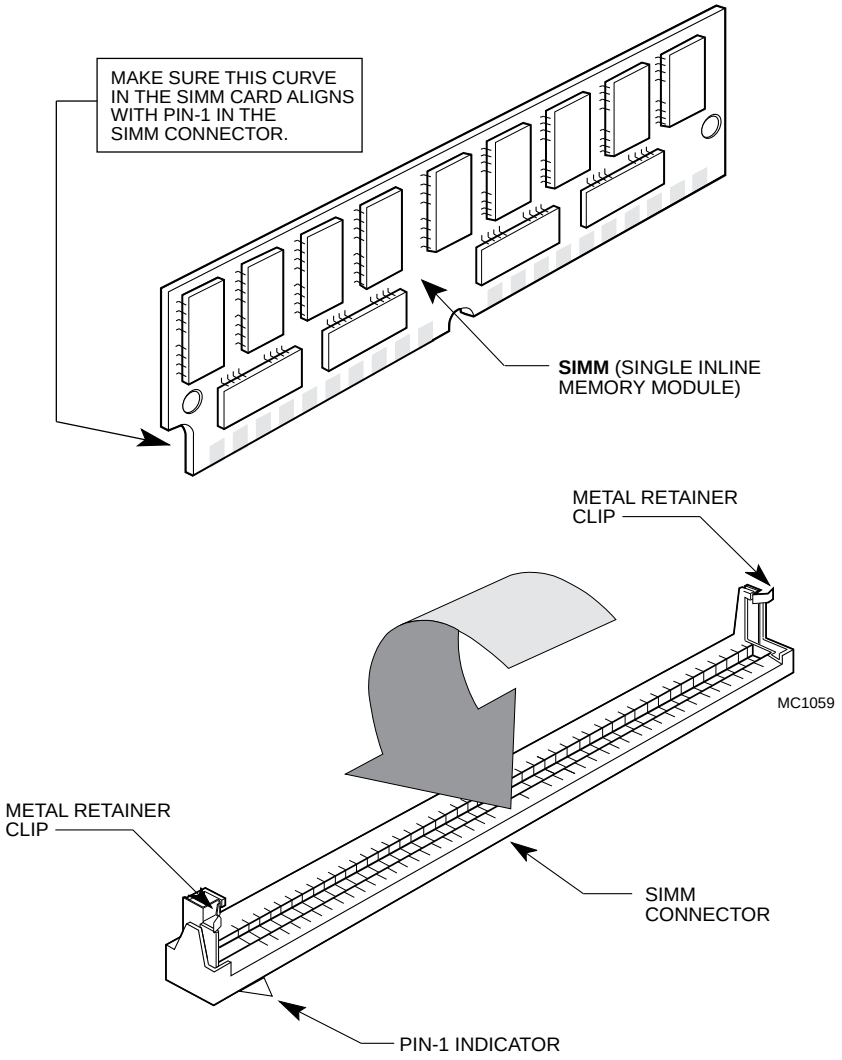

Roadrunner SIMM Module Installation

8.0 CONFIGURING ROADRUNNER AND AM-986 BOARDS

The next three sections supply jumper configuration information for the Roadrunner AM-172 and AM-174 boards, as well as the AM-986 board. The illustrations show the configuration jumpers for each printed circuit board set in their factory default positions.

8.1 Roadrunner AM-172 Board Configuration

The illustration below shows the AM-172 board configured as shipped by Alpha Micro. The only user configurable jumpers on this board are the JP5 and JP6 memory configuration jumpers. These jumpers only need to be reconfigured if you change the amount of memory installed in your computer. All other jumpers on the board should be left in their factory configured positions. All possible configurations for the memory jumpers are shown in the illustration.

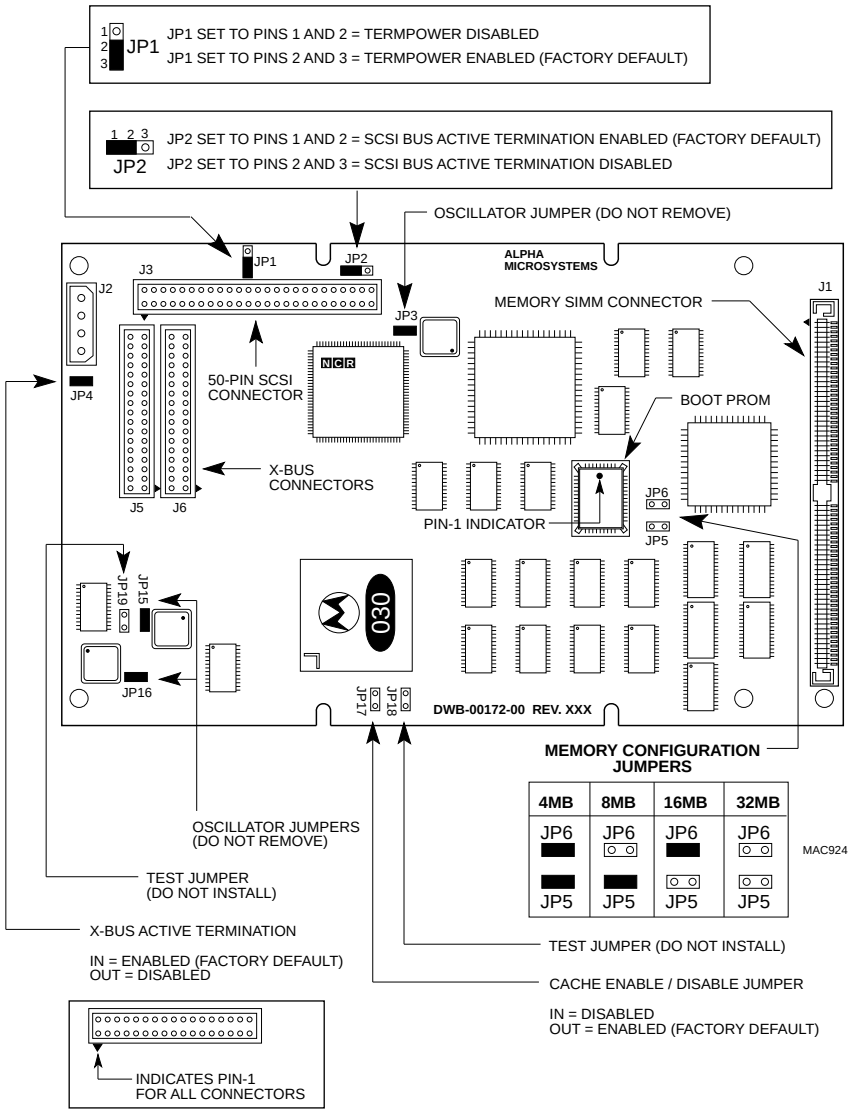

AM-172 Board Configuration

8.2 Roadrunner AM-174 Board Configuration

The illustration below shows the AM-174 board configured as shipped by Alpha Micro. The only user configurable jumpers on this board are the JP11, JP12, and JP13 memory configuration jumpers. These jumpers only need to be reconfigured if you change the amount of memory installed in your computer. All other jumpers on the board should be left in their factory configured positions. All possible configurations for the memory jumpers are shown in the illustration.

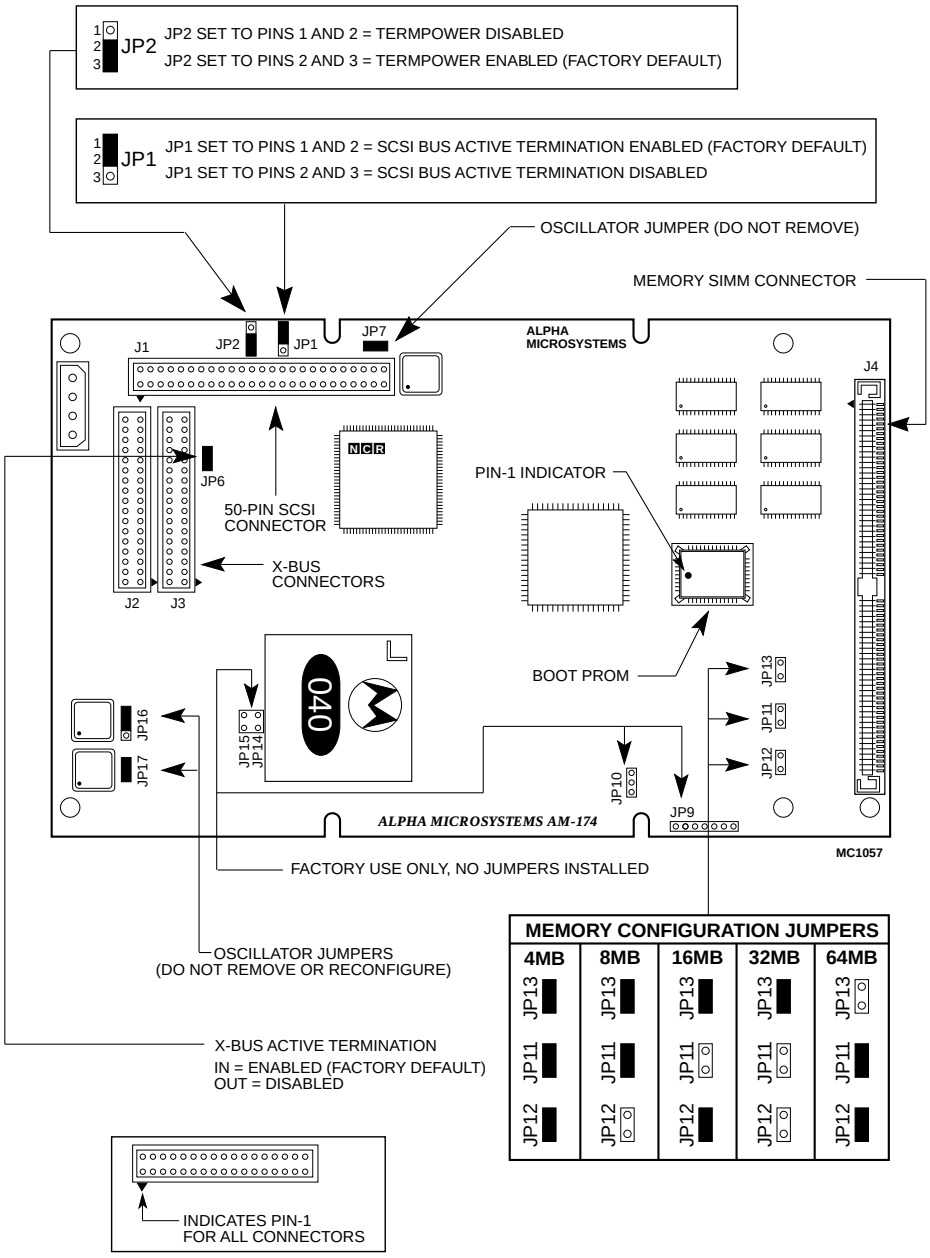

AM-174 Board Configuration

8.3 Boot PROM Removal and Installation

The type of socket used for the boot PROM on your Roadrunner board requires a special IC removal tool. See the illustration below for more information:

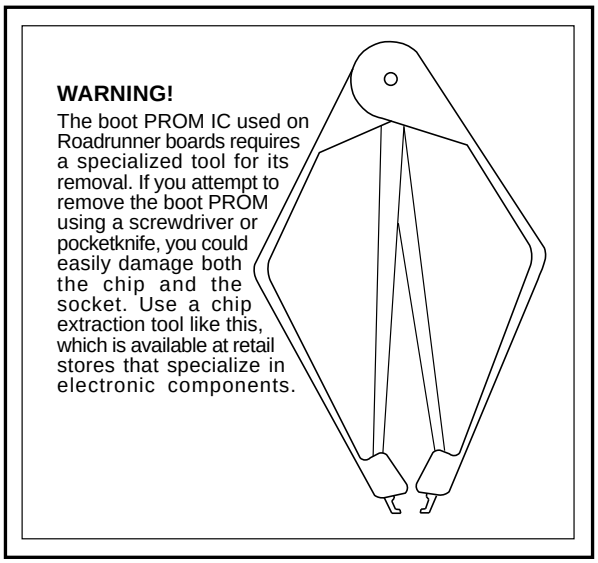

MC1107

Roadrunner Boot PROM Removal

8.4 AM-986 Configuration

The AM-986 board, which attaches to the AM-180 CPU board, only has one jumper. The jumper is factory installed at location JP1 and should not be removed.

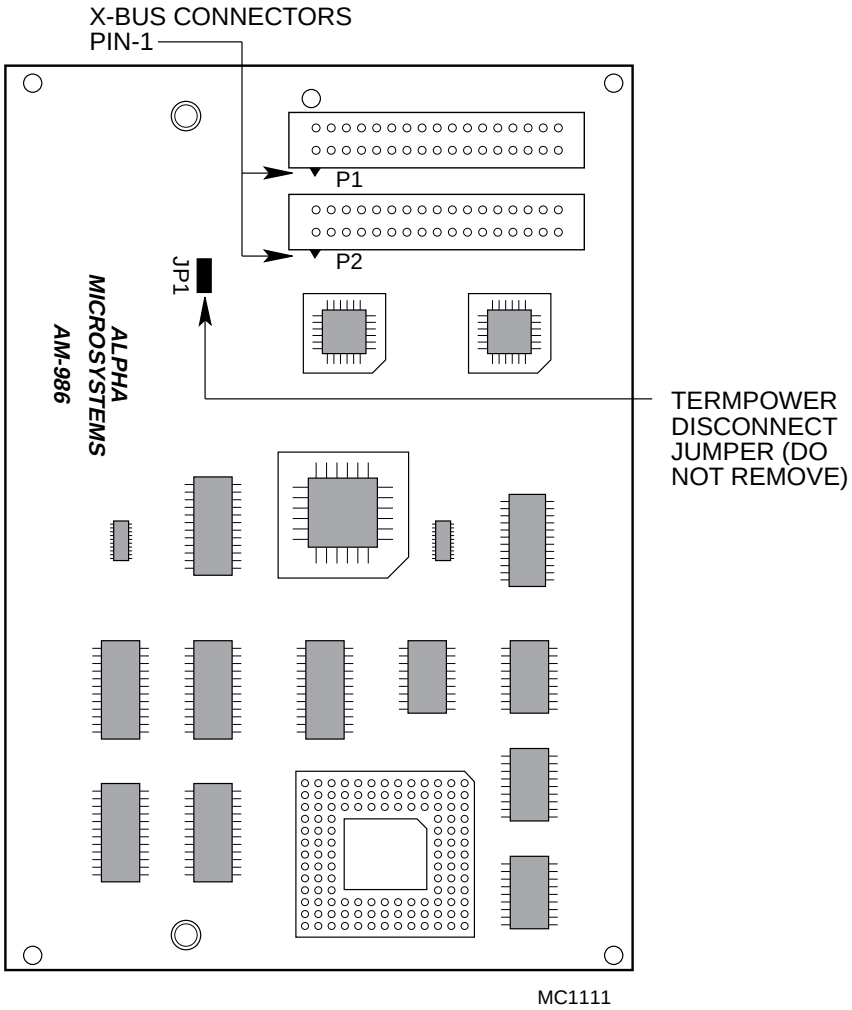

AM-986 Board

9.0 INSTALLING THE AM-986 BOARD

With the AC power cord unplugged and the top cover removed, the components inside your computer are vulnerable to damage caused by static discharge. Your body and clothing are capable of storing an electrical charge that can damage or destroy unprotected electronic components. Prior to handling any computer hardware, make sure your work area is properly protected against static discharge. There are a number of commercially available static protection devices designed specifically to protect your equipment from harmful static discharge.

If you did not order a SCSI disk drive that was pre-loaded with a Roadrunner compatible AMOS operating system, you need to update the software on your existing drive. **The software download and configuration procedure, located in Appendix C, must be completed before the Roadrunner hardware is installed in your computer.**

When installing the AM-986 board, make sure all the pins are properly aligned. If you plug the board in incorrectly, it is possible to short power to ground, resulting in possible damage to both AM-986 and AM-180 boards.

1. The easiest way to do this installation is to remove the AM-180 board from the chassis.

2. The AM-180 board is held in place with two screws, but before you remove the two screws, you should first unfasten the I/O rear panel from the computer. It is not necessary to remove all the I/O cables connected to the rear panel; the objective is simply to move the rear panel just enough so the AM-180 board can be removed.

3. Remove the two screws holding the AM-180 board to the rear panel. Unplug the AM-180 board from the motherboard and remove the board from the chassis.

4. Next, the 68020 CPU chip must be removed from its socket located at U105. To remove the chip, **gently** pry the chip loose using a small flat blade screw driver. Work around the chip lifting from corner to corner and side to side until the chip pops loose from the socket. Don't rush this operation, if too much force is used you could break some of the pins or the ceramic case on the CPU chip.

5. On the AM-180 board, remove the two screws on the P1 connector that hold the insulating paper to the bottom of the AM-180 board. You will later replace these screws with two longer screws (2-56 by 3/4") included in your hardware kit.

6. At this point, your AM-986 board should be ready to install. The AM-986 board sets on top of the AM-180 board, plugging into the CPU socket at location U105. You will notice there is an extra CPU socket installed on the bottom of the AM-986 board. The socket serves two purposes: it adds extra height to the AM-986 board so it will not make contact with components on the AM-180 board; it also protects the pins on the AM-986 board. If a pin does break, you want it to be a pin on the inexpensive socket, not one of the pins on the AM-986 board.

There is a cutout in the AM-986 board that makes it easy to align the board with the CPU socket on the AM-180 board. The two mounting holes shown in the illustration below align with two screw holes on the AM-180 board's P1 VME connector. Remove the protective foam from the socket on the bottom of the AM-986, making sure no foam residue remains. Place the AM-986 board into position, using the cutout to align the pins with the socket. The illustration on the next page shows the AM-986 board sitting in its mounting position on the AM-180 board. If everything is properly aligned, you will feel the board settle into position on the socket. This is another operation where it is best to take your time and be sure the AM-986 and AM-180 CPU socket are properly aligned. When you're sure the AM-986 board is in position, gently press the AM-986 board into the socket.

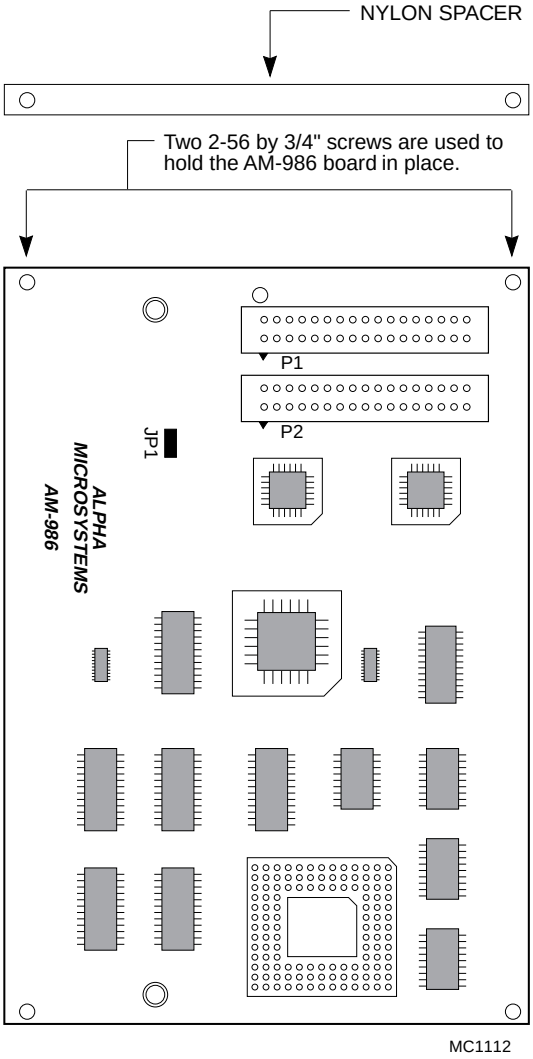

AM-986 Mounting Configuration

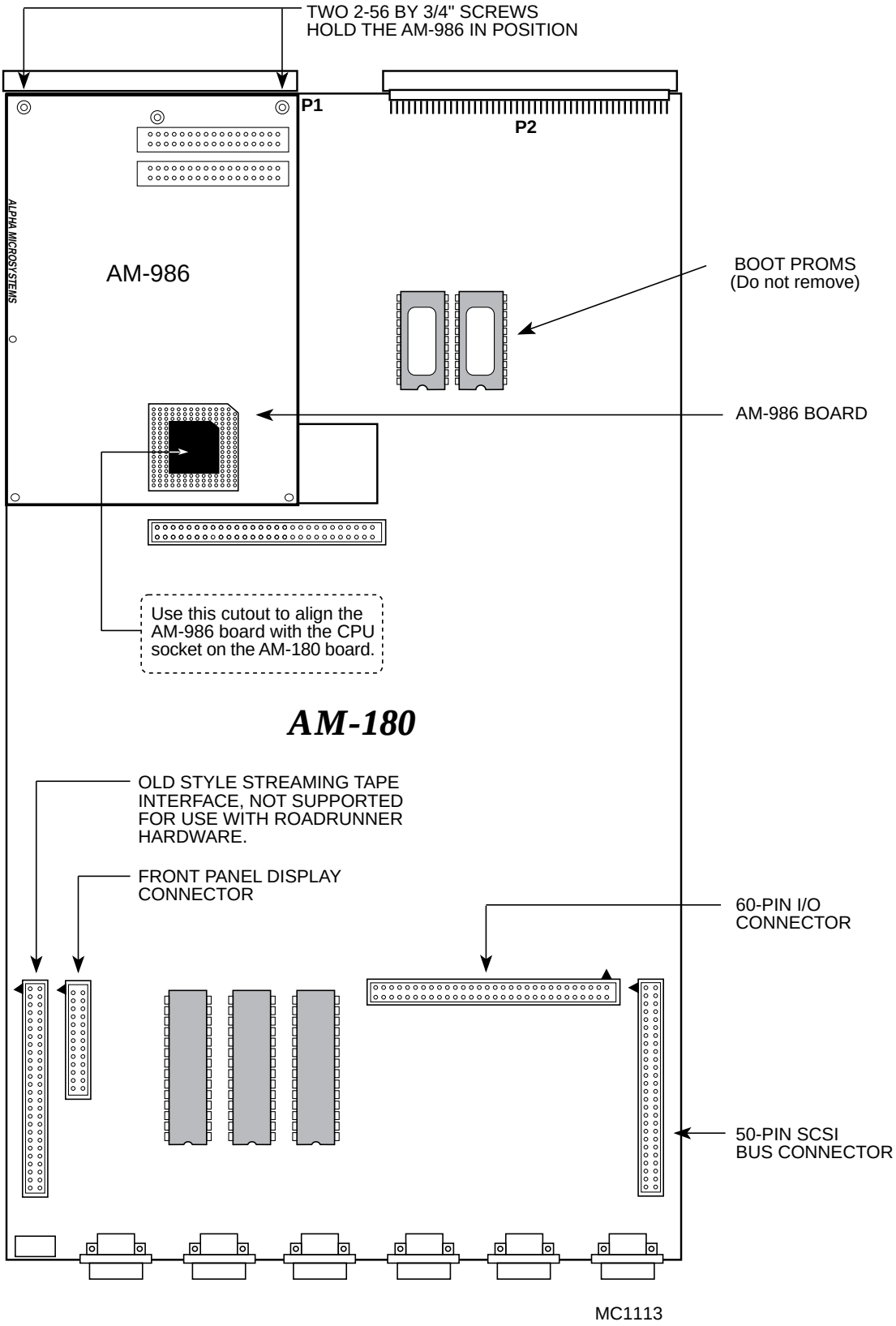

AM-986 Installed on AM-180 Board

7. Once the board is pressed into position, you will notice there is a small gap between the P1 connector on the AM-180 board and the AM-986 board. There is a nylon spacer (shown in the AM-986 illustration) designed to fill the gap between the P1 connector and the AM-986. Slide the spacer into position so it aligns with the P1 screw holes.

8. Included in your hardware kit are two 2-56 by 3/4" screws, designed to secure the AM-986 board to the AM-180 P1 connector. Insert the screws with the screw heads holding the insulating paper against the bottom of the AM-180 board. Place a nut and lock-washer on each of the screws. Lightly tighten the screws to secure the AM-986 and nylon spacer assembly to the P1 connector.

9. Reinstall the AM-180 board into the computer chassis.

10.0 INSTALLING YOUR ROADRUNNER BOARD

Before you install your Roadrunner, make sure the board is configured properly for your configuration. The AM-174 and AM-172 jumper configuration drawings explain the function of each jumper.

Use the following instructions to install the Roadrunner:

1. The Roadrunner board installs on top of your power supply. If you currently have a Xebec or AM-528 board installed at this location, it must be removed.

2. The Roadrunner board must be positioned on the power supply as shown in the illustration on the following page. The end of the Roadrunner board with the 50-pin and two 34-pin connectors must be located nearest the rear panel.

3. The board is held in place with four 6-32 phillips-head screws. If you have an "A" revision AM-172 board, one of the screws requires a #6 nylon washer (shown in the illustration), which protects a surface mount resistor on the Roadrunner board.

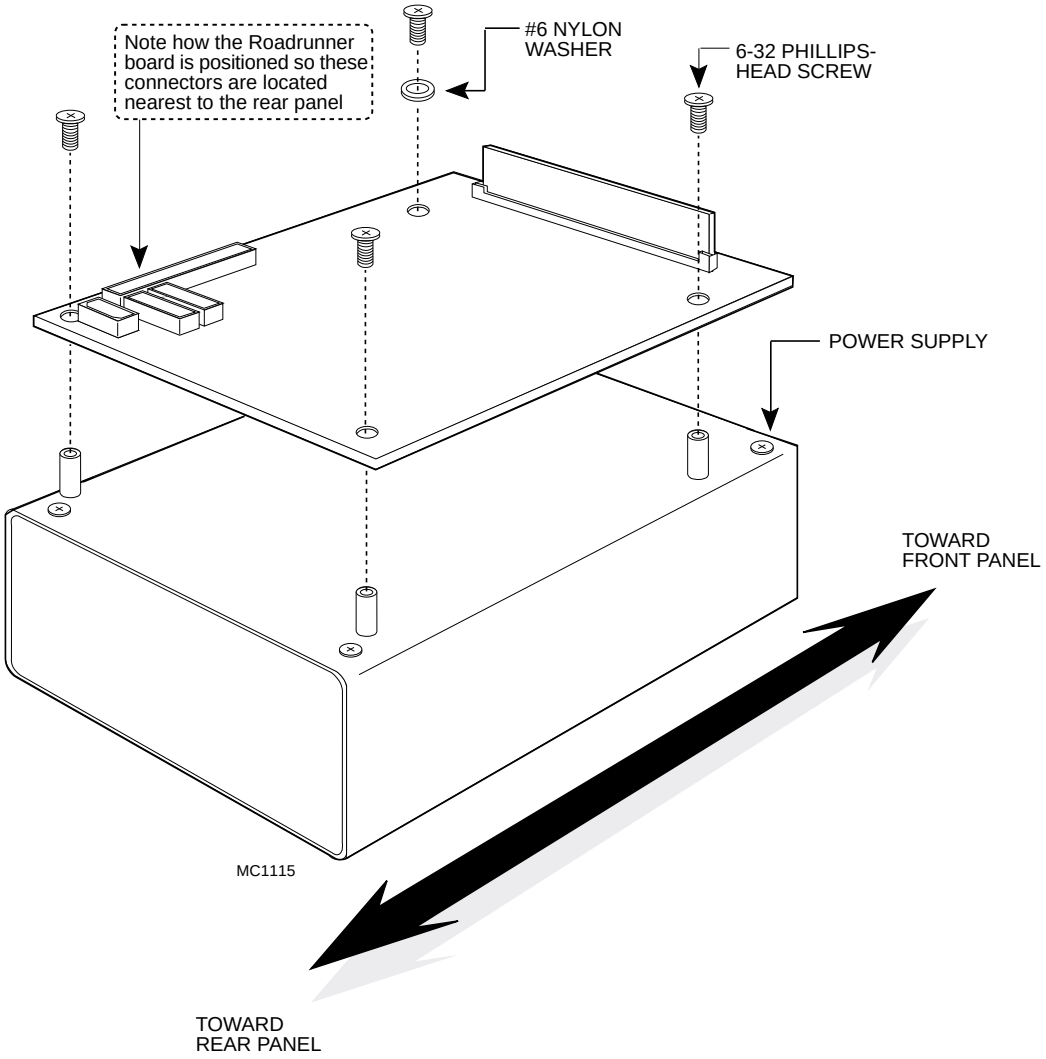

Mounting the Roadrunner Board

11.0 34-PIN X-BUS CABLING PRECAUTIONS

Up to this point, the installation instructions for AM-172 and AM-174 Roadrunner boards have been exactly the same. However, **the installation of the 34-pin X-bus cables is not the same**. This difference becomes important in configurations where an AM-172 (030 based) Roadrunner board is being replaced with an AM-174 (040 based) board. If you remove your Roadrunner 030 board and replace it with an 040 board and then plug the X-bus cables into the 040 board exactly as they were in the 030 board, **your computer will not boot**. If you are performing an 030 to 040 upgrade, completely remove both 34-pin X-bus cables from your computer and reinstall them using the instructions in the X-bus cabling diagram shown in the AM-986 to Roadrunner X-bus cabling diagram.

11.1 AM-986 to Roadrunner 34-Pin X-bus Cabling Instructions

AM-986 and Roadrunner boards are linked together with two 34-pin cables included in the installation kit. These two cables make up the data path between the AM-986 and Roadrunner boards. The cable connections must be made pin-1 to pin-1. To install the cables, use the instructions in the illustration on the next page.

No power is conducted over either of the two 34-pin cables, so no damage will occur if you accidentally reverse these cables. However, if the cables are not plugged in correctly, the system will not boot or run self-test. If your computer does not boot after doing the upgrade, turn off the power and double check your cable connections.

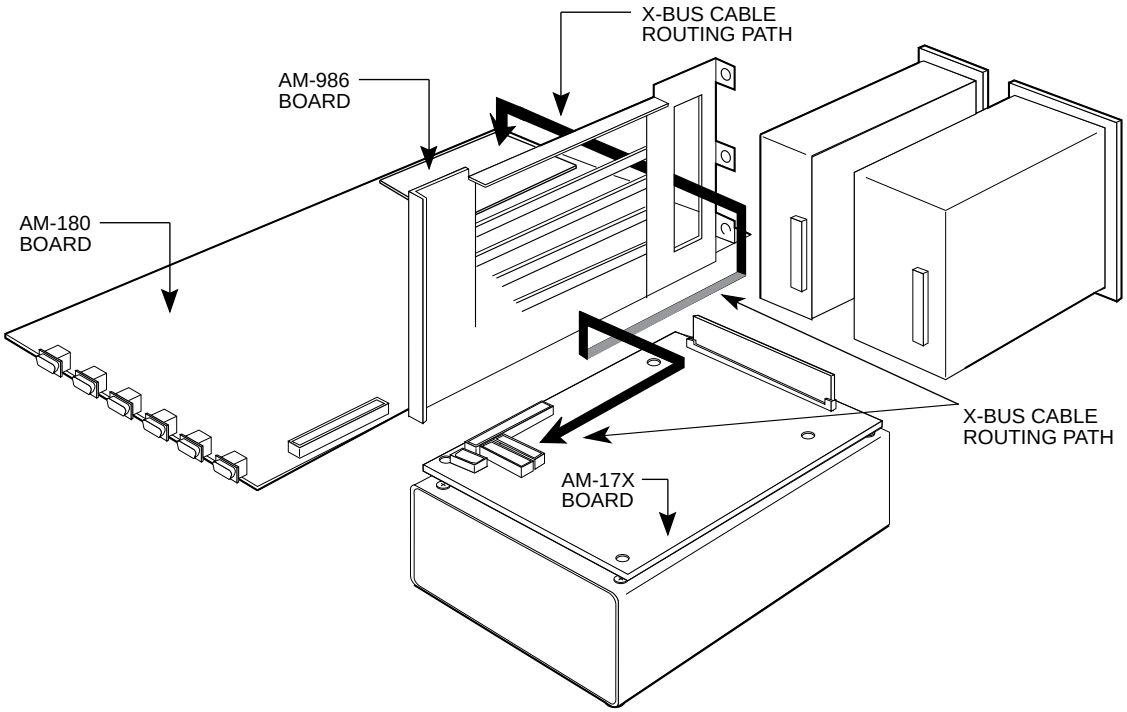

AM-986 TO AM-172 34-PIN CABLE ROUTING

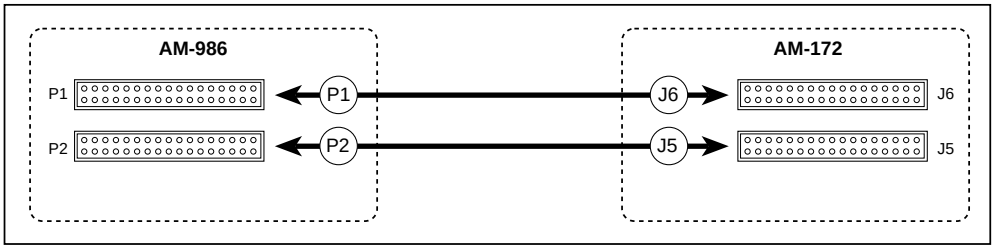

AM-986 TO AM-174 34-PIN CABLE ROUTING

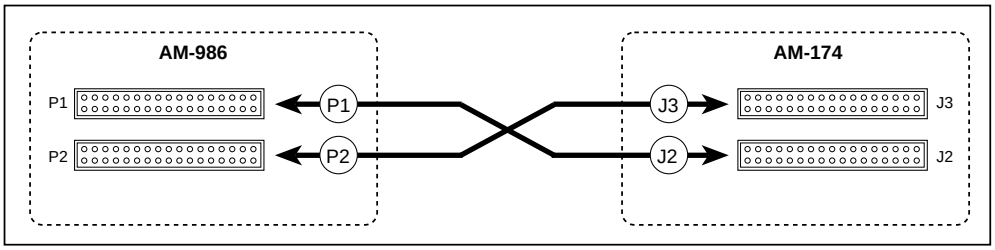

MC1116

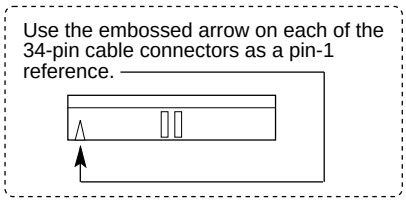

AM-986 to Roadrunner Cable Routing

11.2 Connecting the 50-Pin SCSI Interface Cable

The product installation kit includes a new 50-pin SCSI interface cable (DWB-10193-04). However, if you are currently using SCSI devices, your old 50-pin cable plugged into the SASI port on your AM-180 board may work just fine. If you find that your existing cable is long enough to allow it to be plugged into the SCSI port on the Roadrunner board, you can use your old cable. If you use the SCSI cable included in the product kit, it should be installed and routed as shown in the illustration below. All cable connections must be made pin-1 to pin-1.

Your product installation kit includes an external terminator. This terminator plugs into the external SCSI connector on the rear panel of your computer. If you use the external terminator, you must insure that none of your internally mounted SCSI devices have terminators installed.

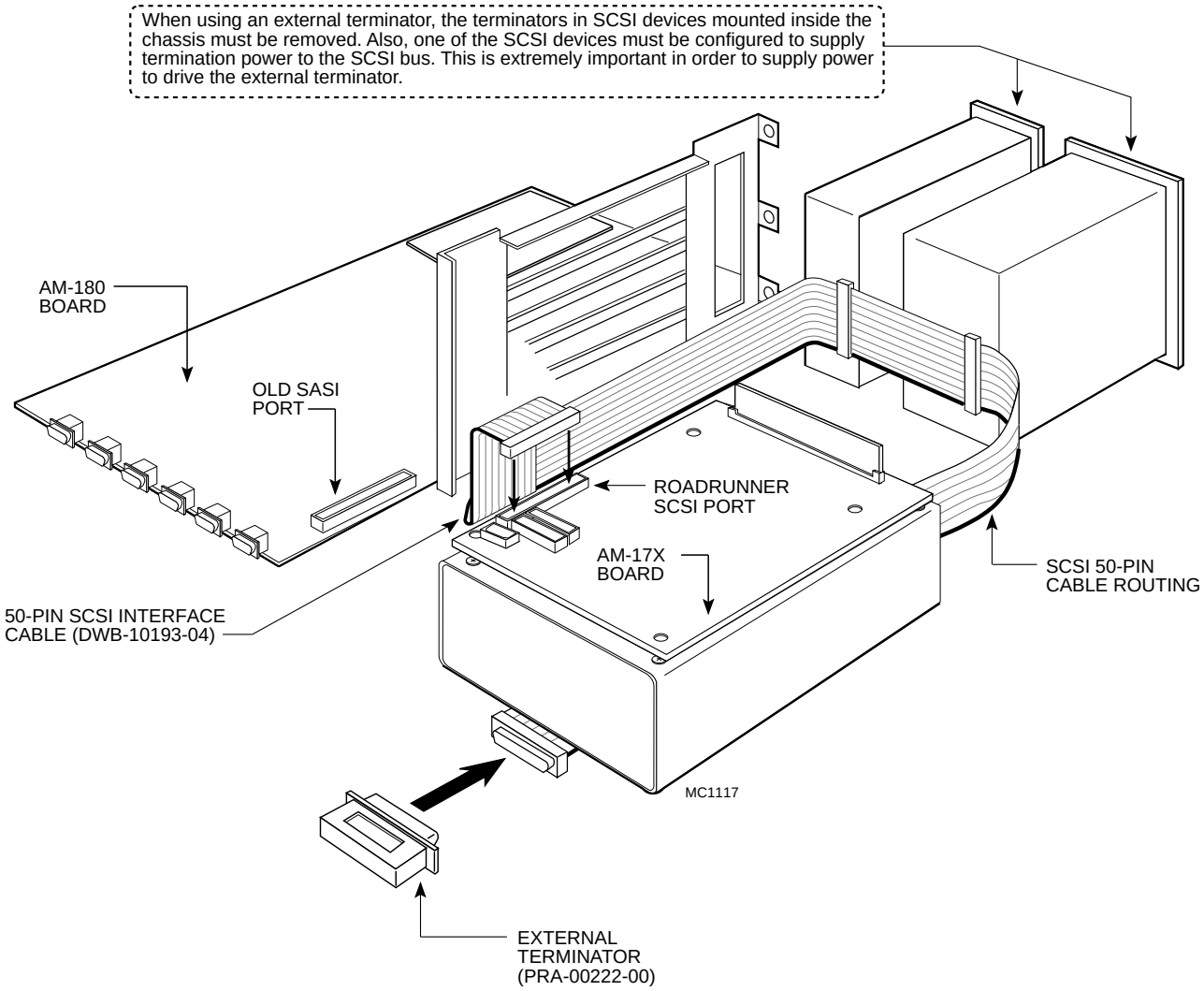

50-Pin SCSI Interface Cable Routing

11.3 Connect DC Power Cable to the Roadrunner Board

The Roadrunner board has a standard 4-pin DC power connector. Simply take the 4-pin power cable included in your product installation kit and plug it in between the Roadrunner board and one of the power connectors on your 6-slot motherboard. Although power connectors are keyed, with extra force they can be installed incorrectly, so be careful.

12.0 BOOTING THE NEW ROADRUNNER HARDWARE

In order to perform the steps outlined in this section, your disk drive must be properly configured with a bootable Roadrunner compatible AMOS operating system. If you are using your existing drive, the instructions in this section assume that you have already configured your software, based on the instructions in Appendix C, prior to installing the Roadrunner hardware.

If you installed a new SCSI disk drive that was pre-loaded with a bootable Roadrunner compatible copy of AMOS, your computer is ready to boot.

SCSI drives factory loaded with a bootable Roadrunner compatible AMOS operating system are configured with the simple dispatcher, SIMRR.SYS. The simple dispatcher is intended for **temporary use only**. To configure the high performance SCSI dispatcher, you must purchase the PIC for the dispatcher from Alpha Micro and configure it as described in Appendix C.

Turn the computer's power switch to the on position and your Roadrunner hardware will start the boot process just as your old CPU board did. If the SCSI dispatcher was not defined in your system initialization command file prior to turning off the computer and removing your old CPU board, an error message similiar to this:

```
?The SCSI dispatcher must be defined in order to use this driver
```

will be displayed on your terminal. This error will be displayed each time a DEVTBL statement for a SCSI magnetic tape drive is encountered in your system initialization command file. While this error will not prevent the computer from booting, none of your magnetic tape devices will work until the dispatcher is defined.

13.0 INITIAL SYSTEM TESTING

After installation is complete, run the Roadrunner Self Test program to make sure each subsystem is functional. The self test diagnostics are incorporated into the boot PROM on the Roadrunner. Refer to the *Alpha Micro Self Test User's Guide* for instructions.

Once you have completed self test, press the reset button and wait for the computer to boot. At the AMOS prompt, type:

SYSTAT RETURN

Check the system status information displayed by the SYSTAT program and insure all jobs applicable to your computer are up and running—e.g., terminal, printer, task manager, etc.

14.0 OPERATIONAL NOTES

Under normal operating conditions, the RUN light on AM-2000 computers (without Roadrunner hardware installed) will remain lit at all times. With the Roadrunner hardware installed and the system booted, you'll notice the RUN light on your computer's front panel may not be lit. This is because the Roadrunner hardware uses the RUN light as an activity light and during periods of no activity the RUN light will go out.

When your computer boots, a number of status codes are displayed on the computer's front panel. The following tables show the codes generated by the AMOS monitor, as well as the codes generated by the boot PROMS.

For the tables on the following pages, the first digit of many status codes is shown as "x". This digit is either 2 or 3, and identifies the device the computer is attempting to boot from:

- 2 = The alternate boot device.
- 3 = The primary boot device.

If you have an alternate boot device selected, the first few status codes will always begin with 2 since the computer checks the alternate device first. If there is a bootable tape or floppy diskette in the alternate boot device, the first digit of the status codes remains 2. If there is no bootable medium in the alternate device, the computer boots from the primary device and the first digit of the status codes changes to 3.

Table 1. Front Panel Status Codes Generated by the Monitor

CODE	MEANING
4	System is out of QUEUE blocks.
8	A/C power dropped below an acceptable level.
9	Memory parity error.
10	An interface driver (.IDV) defined in a TRMDEF statement in the system initialization command file was not found in account [1,6] on the boot device.
11	A terminal driver (.TDV) defined in a TRMDEF statement in the system initialization command file was not found in account [1,6] on the boot device.
12	System Initialization Command file was not found.

Table 2. Front Panel Status Codes Generated by the Boot PROMS

CODE	MEANING
F	System is now clearing and sizing memory.
20	Roadrunner has determined the computer booting in an AM-2000 computer.
20	The system is beginning to execute the boot PROM. An error at this point indicates your computer has a faulty PROM. Contact your dealer.
21	The system is transferring the instructions from the PROM into its Random Access Memory (RAM). If an error occurs here, your computer might have a bad PROM or bad memory.

Table 2 (Continued)

CODE	MEANING
22	The system is generating a checksum of the instructions in Random Access Memory. If this calculated checksum doesn't match the checksum coded into the instructions themselves, you see a "2E" error code.
x3	The system is initializing the boot device. If the boot stops at this point, it may indicate a hardware problem with the boot device. For disk devices, when turning power on, this code might remain on the display for a short time while the disk drive spins up to operating speed.
x4	The system is reading the Master File Directory (MFD) from disk. An error at this point indicates disk problems.
x5	Searching for the User File Directory (UFD) account [1,2] on the boot device.
x6	Searching for BADBLK.SYS. Valid only on disk drives that use a BADBLK.SYS file.
x7	Loading BADBLK.SYS. Valid only on disk drives that use a BADBLK.SYS file.
x8	The system is searching for account DSK0:[1,4]. An error at this point may indicate disk problems. Try reloading the latest version of the system software.
x9	The system is looking for the system monitor file, AMOS32.MON, in DSK0:[1,4]. If this file is missing, reload the latest version of the system software.
x9	If your computer is trying to boot from a tape device, this code indicates the system is searching for a label block on the tape.
xA	The system is loading the AMOS monitor from the boot device. This code might indicate a disk problem.

Table 2 (continued)

CODE	MEANING
xb	The system is beginning to execute the AMOS monitor program. If an error occurs at this point, try reloading the latest version of the system software.
xd	System bootup failed because of a time-out error. This code may indicate faulty memory or an addressing problem.
2E	System bootup failed because of a bootstrap loader program checksum error. This code may indicate a bad PROM or bad memory.
xF	System bootup failed because of an invalid boot device selection. Check the boot ID switches on the back panel of your computer.

Other status codes can appear during self test; these codes are discussed in the *Alpha Micro Self Test User's Guide*.

15.0 ROADRUNNER LOGO

Your product installation kit includes a special Roadrunner logo. This logo, which is shown below, should be affixed to your computer's front panel after the Roadrunner hardware has been installed.

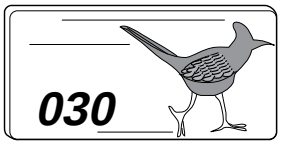

The illustration above shows the 030 logo, if you ordered an AM-174 Roadrunner 040, your product installation kit will include an 040 Roadrunner logo.

16.0 ADDITIONAL DOCUMENTATION

For additional HARDWARE information, refer to the following:

1. *AM-2000 Owner's Manual*
2. *Alpha Micro Self Test User's Guide*
3. *Alpha Micro Installation and Planning Guide*

For additional SOFTWARE information, refer to the following:

1. *AMOS System Operator's Guide*
2. *AMOS System Commands Reference Manual*
3. The Release Notes for your version of AMOS and the corresponding Product Support Software Kit (if applicable).

APPENDIX A

SCSI TERMINATION

A.1 SCSI TERMINATION USING EXTERNAL TERMINATOR OPTION

The preferred method of terminating the SCSI bus in an AMOS based computer is the installation of an external terminator. In early April of 1993, the external SCSI bus terminator became standard on all AMOS based computer configurations. Using an external terminator makes the task of installing an add-on subsystem (like a portable CD-ROM drive) easier, eliminating the necessity of removing terminators from a SCSI device located in the host computer.

The Roadrunner hardware is sensitive in regards to SCSI bus termination. If you are using the external terminator and one of the SCSI devices inside your computer also has its terminators installed, you may experience problems.

The SCSI bus must be terminated at each end of the cable. The Roadrunner terminates the SCSI bus at one end of the 50-pin interface cable. Termination at or close to the other end of the SCSI bus is required, either via an external terminator or via a terminator installed on the SCSI peripheral nearest the end of the bus.

External terminators are available from Alpha Micro under part number PRA-00222-00.

To use the external terminator, you need to insure none of your SCSI peripherals inside the computer are terminated. You will also need to follow the guidelines in the section on providing termination power for the SCSI bus.

The external terminator is shown in the illustration below:

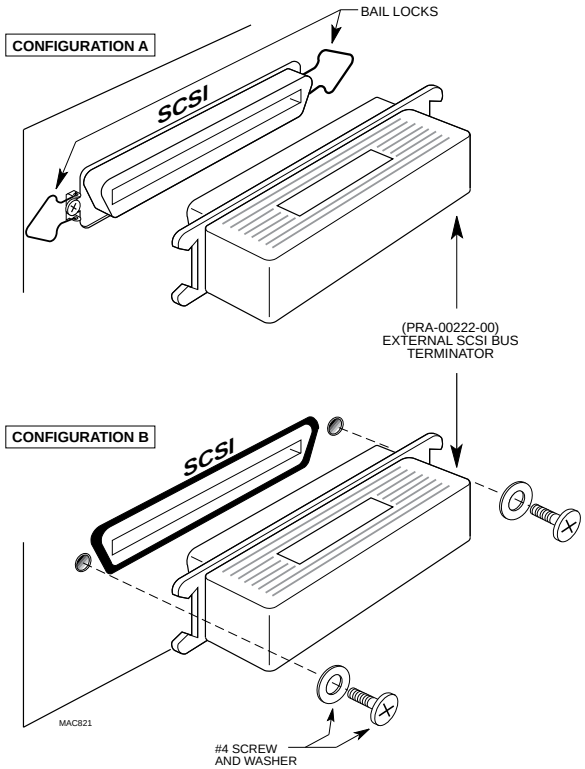

External Terminator Installation

The illustration shows two different types of external SCSI connectors.

1. Configuration "A" shows an extended external SCSI connector and bail locks for holding the terminator in place. This configuration is used on several different models of computers sold by Alpha Micro, including AM-990 and AM-1600 computers. The terminator is installed by sliding it over the connector and then latching the bail locks into the notches in the terminator.

2. Configuration "B" shows a flush mounted external SCSI connector. This is the configuration used on pedestal style AM-2000 computers and AM-2001 subsystems. In this configuration, the terminator inserts into a cutout in the sheet metal and over the SCSI connector. The terminator is held in place with two #4 screws and washers.

A.1.1 Termination Procedure (Without External Terminator)

1. For all AM-2000 computers, the last SCSI device attached to the connector farthest down the cable away from the CPU board must have its terminators installed. If only one SCSI device is installed, that device must be terminated.

2. For AM-2001 subsystem installations, the last SCSI device attached to the connector farthest down the cable away from the host computer must have its terminators installed. All SCSI devices inside the host computer must have their terminators removed. If you are mixing SCSI-1 and SCSI-2 disk drives, do not terminate the last SCSI device in the subsystem; instead, plug an external terminator (PRA-00222-00) into the open rear panel SCSI connector on the rear panel of the AM-2001 subsystem. This will properly terminate all SCSI-1 and SCS-2 devices in both the host computer and the subsystem.

A.2 TERMINATOR POWER

In order to properly terminate the SCSI bus, one of the SCSI peripherals must be configured to supply termination power to the SCSI bus.

Use the following guidelines to determine which peripheral will be used to supply termination power for the SCSI bus:

1. Whenever possible, only one SCSI peripheral will be configured to supply termination power to the SCSI bus.

2. If a computer has more than one SCSI peripheral and at least one of those peripherals is a disk drive, one disk drive will be configured to supply termination power to the bus. The other disk or tape SCSI devices will be configured so they do not supply termination power.

3. If a computer does not have a SCSI disk drive, but does have one or more SCSI magnetic tape or CD-ROM drives, then one of these devices will be configured to supply termination power.

4. If a computer with one or more SCSI peripherals is cabled to a subsystem with additional SCSI devices, one SCSI device in the host computer would normally be configured to supply termination power for the bus.

   You should avoid having a SCSI device in both the host computer and the subsystem configured to supply termination power. Ideally, you want the source of the termination power for the bus to be supplied by **one power source**.

For information on how to configure terminator power, see the following documents:

- *SCSI Disk Drives Installation Instructions,* PDI-00436-20, revision A12 or later.

- *AM-625/626/627 SCSI 1/4" Streaming Tape Drive Installation Instructions*, PDI-00625-00, revision A05 or later.

- *AM-647 DAT Tape Drive Installation Instructions,* PDI-00647-00, revision A02 or later.

APPENDIX B

READ-AHEAD AND WRITE BUFFERING

B.1 INTRODUCTION

In the past, AMOS systems achieved high levels of performance by using a "Herbie" style disk controller (such as the AM-520) to offload a large portion of the overhead associated with disk access. One additional benefit of this offloading, is that extra cycles are available on the Herbie controller to perform functions such as read-ahead and write buffering. Both of these schemes are used by the current AM-520 firmware, but cannot be used on other non-intelligent interfaces such as the Alpha Micro SASI interface because the main processor running AMOS has to handle control of the SASI interface, stealing CPU cycles away from other resources, such as the terminal service system and user jobs.

In the case of the Roadrunner board, a "hybrid" Herbie style controller has been implemented. A programmable RISC controller is used for SCSI bus communications and for data transfer to and from the Roadrunner's SCSI bus. The 68030 CPU is only involved with setup before and cleanup after a SCSI command is sent to a device—the rest of the command, including data transfer, is handled by the RISC processor.

Having the RISC processor take care of these details, allows us to implement both read-ahead and write buffering without the need for a separate Herbie controller. Also, higher levels of performance will be seen when using a fast SCSI-2 disk drive than with an AM-520 using ESDI drives for the following reasons:

- Physically, SCSI-2 drives are faster than most ESDI drives. They spin the platters twice as fast (reducing latency) and have significantly faster seek times.

- Data transfer rates are higher with fast SCSI-2 drives. ESDI drives have a maximum transfer rate of 18Mbits/s, whereas fast SCSI-2 drives transfer data at 80Mbits/s (or around 4 times faster).

- The data transfer path is much faster with the RISC SCSI-2 controller. It is able to read from or write to system memory 32 bits at a time, taking 150ns per read or write. The AM-520 transfers data 16 bits at a time, taking 210ns per 16 bit transfer.

B.2 READ AHEAD

The Roadrunner's SCSI disk driver, SCZRR.DVR, is able to perform read-ahead directly into AMOS disk cache. When any program attempts to read a physical block from a disk, the SCZRR driver will also read up to an additional seven sequential blocks from the disk drive and store these read-ahead blocks in the cache.

This read-ahead scheme works very well when jobs on the system are doing a large number of sequential reads. For example, data base searches and programs like REDALL execute much faster because the data they require is already in memory and only has to be transferred from the cache into the user partition.

Programs that do significant random disk access (such as RNDRED) tend to slow down with this read ahead scheme. Most of the slow down is caused by "thrashing" of the cache, where cache entries that will be used again are removed from the cache due to the allocation requirements of the read-ahead blocks (which typically are never used). The actual data transfer overhead is very little, as most SCSI disk drives (especially fast SCSI-2 drives) have a track cache built into the drive allowing both the target and read ahead blocks to be transferred over the SCSI cable without delay.

B.2.1 Controlling Read-Ahead

In order for read-ahead to occur on the Roadrunner, the AMOS disk cache, DCACHE.SYS, must be installed as normal and additionally, the full SCSI dispatcher (SCZRR.SYS) must also be installed. The number of read-ahead blocks to be transferred into cache on **every** physical disk access is controlled by the FIXLOG program.

When you use FIXLOG to create a driver for the Roadrunner hardware, a new option will appear, which is the number of read-ahead blocks. For example, type:

```
FIXLOG RETURN

FIXLOG.LIT Version x.x(xxx)

1. Change the number of logicals
2. Create a sub-system driver

Enter choice: 2 RETURN

Enter name of generic driver to be used: SCZRR RETURN
Enter number of logical units per physical unit: 10 RETURN
Enter SCSI id (0-6): 0 RETURN
Enter number of read-ahead blocks (0-7): 5 RETURN
Enter new driver name: MAX RETURN
New driver is now in memory.
```

To save the driver you have created, type:

```
SAVE MAX.DVR RETURN
```

If you wish to disable or change the number of read-ahead blocks, simply use the FIXLOG program to generate a new disk driver and if the disk driver is for the DSK: device, don't forget to use MONGEN and embed the new driver into the system monitor.

The generic driver Roadrunner SCSI disk driver (SCZRR.DVR) is setup for seven read-ahead blocks.

B.3 WRITE BUFFERING FOR SCSI-1 AND SCSI-2 DISK DRIVES

AMOS (and therefore every application written for AMOS) understands only 512 byte disk blocks. Therefore, when a disk write request is made by a program, a single block transfer is made to the disk drive. If the program then writes the next sequential block, the system must wait the latency time of the drive (i.e., the time it takes the drive to complete one revolution) before the next block can be written. Latency even on fast SCSI-2 drives is around 7ms.

In order to speed up the write process, when write buffering is enabled, all writes to the SCSI disk are first transferred into a buffer. If the write buffer becomes at least half full, or around three quarters of a second passes with no reads, or if a preset "guaranteed flush" timeout occurs, the SCZRR.DVR disk driver will begin scanning through the write buffer, finding blocks that need to be written out to the drive. The algorithm used to flush blocks out to the drive is able to find up to eight consecutive blocks and write them to the disk drive as a single write command, therefore dramatically improving system performance.

Another benefit of write buffering is it tends to eliminate duplicate disk writes, such as bitmap updates during operations such as copying files and tape restores and prevents head thrashing when reading through random access data files and writing a sequential file out to the disk (as most report generation programs do).

B.3.1 Potential Pitfalls

Obviously, there can be problems with write buffering, especially if either the system crashes or is powered off while writes are pending in the write buffer. If either of these two cases occur, all pending writes will be lost. Though this sounds like a major problem, it can also happen if write buffering is not enabled. However, write buffering increases the number of writes at risk.

To help reduce the possibility of data loss, certain safeguards have been put in place. Writes are not buffered indefinitely; they are performed whenever the device is not performing reads. Even if the drive is busy with read requests, the buffer is still periodically flushed, based on a user definable "absolute flush time." Additionally, the MONTST command automatically flushes the write buffer.

The primary write buffering risks are an errant software operation or a hardware failure that causes a system crash.

Therefore, you must weigh the potential for data loss (which is always there) versus the dramatic performance increase seen when using write buffering. If you are worried about the reliability of write buffering, it may be worth keeping in mind that the AM-520 disk controller has always used write buffering on a track-by-track basis (not quite as efficiently as the Roadrunner write buffering scheme however). The SMARTDRV program that comes with MS-DOS 5.0 does write buffering (you may have noticed the "Waiting for system shutdown" message when re-booting a PC with CTRL-ALT-DELETE) and Unix based computers have always done it.

B.3.2 Setting Up Write Buffering

In order to enable write buffering, you must be using the full SCSI dispatcher (SCZRR.SYS). Write buffering is enabled by adding parameters to the SYSTEM statement used to load the driver. All hard disk subsystem drivers for the Roadrunner SCSI interface must be loaded into system memory. Appending "/N" followed by the buffer-size and flush-period will enable write buffering for that device. For example:

```
SYSTEM DVR:devn/N buffer-size flush-period
```

where devn is the device you want to enable write buffering for (for example DSK and SUB).

One SYSTEM command is required for each different SCSI disk driver present in the system. For example, if you had two 1.2GB SCSI-2 drives named as DSK0-36 and DSK37-73 and one 540MB SCSI-2 drive named SUB0-17, you would need one additional SYSTEM command for the DSK device (although it's really two physical drives) and one additional SYSTEM command for the SUB device.

When specifying write buffering for a device, two files are loaded into system memory: .DVR and .WRC, which are the driver and cache buffer. This is true for all SCSI disk devices except the DSK device. For the DSK device, the file DSK.DVR does not need to be created because it is already loaded into the system monitor. Therefore, for the DSK device, only the file DSK.WRC will be loaded into system memory.

The buffer-size is the size of the write buffer (you specify the size in Kilobytes). Specifying a buffer size of over 100KB is unlikely to improve performance.

The flush-period is the absolute maximum number of seconds data may be left in the write buffer without being written to the disk. For example, if you specified 30, you would know that after 30 seconds any pending writes would be written to the disk. This is true even if the disk is constantly busy servicing reads.

In the three drive example mentioned earlier, the added SYSTEM commands would look similiar to this:

```
SYSTEM DVR:DSK/N 100K 60  ;Driver in AMOS will create DSK.WRC
SYSTEM DVR:SUB/N 100K 60  ;Load SUB.DVR and create SUB.WRC
```

This would set up 100KB of write buffering for the DSK devices and 100KB of write buffering for the SUB device. All three drives would have their write buffers flushed every minute (or sooner if the drives are not busy with read requests).

B.4 FINAL NOTES

Both read-ahead and write buffering schemes used on the Roadrunner hardware dramatically improve system performance in our lab tests. Both schemes are fine tuned for both the 68030 processor and RISC SCSI controller and do not take cycles away from AMOS like other commercially available disk optimization software.

Although our lab tests attempt to simulate the "real world" of user applications, they probably use the resources of the Roadrunner CPU and SCSI sub-system completely differently than your application does, therefore we highly recommend you experiment with both cache and write buffer sizes, read-ahead blocks and flush periods on an installed system to find the best possible combination for that system.

APPENDIX C

ROADRUNNER SOFTWARE CONFIGURATION

C.1 PREPARING FOR A ROADRUNNER UPGRADE

Before you can install the Roadrunner software, you must consider these questions:

- Are all the boards in my computer compatible with the Roadrunner hardware?
- Do any of my peripheral devices need to be upgraded for Roadrunner compatibility?
- Do I have a current and complete system backup?
- Do I have a tape available to warm boot the computer?

The first two questions are covered earlier in this document in the section dealing with compatibility. Make sure you read the compatibility section very carefully before attempting the installation. The second two questions, discussed in the next few sections, might be the most important if you encounter a problem during the installation.

C.1.1 Protecting Your Data

When doing a major upgrade to your computer, you want to be absolutely sure you have a recent and complete system backup. While it is very unlikely data stored on your hard disk drive would be corrupted when upgrading your computer—you should be prepared for anything. **Before you loosen the first screw or download any new software, make sure all your data is copied onto some form of backup media.** Make sure you are able to read the data on your backup media; you want to be absolutely sure the data on your backup media is both readable and restorable.

C.1.2 Warm Boot Ability

A warm boot tape allows you to access the computer in situations where you are not able to boot from the hard disk drive. When doing a Roadrunner upgrade, you'll be modifying the system initialization command file and using the MONGEN program to embed a new driver in your AMOS monitor. Either of these two operations, if done incorrectly, could result in a computer that won't boot. If you have a warm boot tape, you will be able to access your hard disk drive and correct the situation which prevented you from booting. Without a warm boot tape, it will be much more difficult to access the computer and correct the problem on the hard disk drive. See the *Systems Commands Reference Manual* for information on how to create a warm boot monitor and a bootable tape.

C.1.3 Booting from a Floppy Drive

If your computer includes a floppy drive, it can be configured as a boot device. A floppy drive makes an excellent alternate boot device and may prove invaluable should your hard disk drive fail to boot.

To boot from a diskette, you must reconfigure the AM-180 board's boot switch, selecting your floppy drive as the boot device. The floppy drive can be configured as either the main or alternate boot device. Information on how to configure the boot switch is located in the *AM-2000 Owner's Manual*. Even though the entire AMOS release will not fit on a single diskette, you can create a bootable diskette by copying only files essential for booting and minimal operation onto the diskette. Once you copy the necessary files onto the diskette, you must use the MONGEN program to create a bootable monitor.

AMOS contains two special drivers designed for making bootable diskettes using the MONGEN program:

- BMIN.DVR is used for creating a bootable diskette for computers using 5-1/4" half-height floppy drives.
- BFLP.DVR is used for creating a bootable diskette for computers using 3-1/2" floppy drives.

Don't forget that the system initialization command file on the diskette must be updated to designate the floppy drive as the boot device.

C.1.4 Upgrading Your AMOS Operating Software

The instructions in this section are based on the assumption that you are loading a Roadrunner compatible version of AMOS on your existing disk drive. Since this operation should be done before you install the Roadrunner hardware, the assumption is also made that your disk drive is connected to the SASI port on your AM-2000 computer.

If your disk drive is running an operating system earlier than AMOS PR5/94 1.4C or 2.2C PR5/94, you will need to update your operating system. It is highly recommended that you update your operating system **before you install the Roadrunner hardware**. Load the Roadrunner compatible operating system; if you are installing a Roadrunner 040 board and you are using a software release earlier than PR8/94, you will need to download the Product Support Software Kit designed for the Roadrunner 040. Once the software is loaded, you'll need to:

- Use the MONGEN program to load your boot device driver into the new monitor; SCZDVR.DVR is the driver used for a SCSI drive.

- If you are using a DAT drive, you must log into the DVR: account and type:

  `COPY DAT.DVR=647DVR.DVR` RETURN

- If you are using an AM-625, AM-626 or AM-627 Tandberg tape drive, you must log into the DVR: account and type:

  `COPY STR.DVR=625DVR.DVR` RETURN

- If you are using an AM-645 Exabyte tape drive, you must log into the DVR: account and type:

  `COPY MTX.DVR=645DVR.DVR` RETURN

Once you execute the above copy command, the AM-645 tape drive will not be operational until you install the Roadrunner hardware. Also, unlike the previous AM-645 driver, 645DVR.DVR is not SSD protected.

After the software has been configured, make sure your computer is fully functional. Reboot the computer and do a complete check of all the hardware on your computer—e.g., printers, magnetic tape drives, network hardware (if applicable), etc. After you are satisfied all the hardware is working properly with the new operating system, you must configure the AMOS monitor to be compatible with the Roadrunner hardware as described in the next section.

Using SCZDVR.DVR as described above will allow your computer to boot using the SASI port on your AM-180 board. If you are going to use the high performance SCSI port on the Roadrunner, you will need to follow the instructions in the next section, which describe the use of SCZRR.DVR. This is the driver used by MONGEN to make a bootable monitor for a SCSI drive connected to the Roadrunner.

C.1.5 Preparing the Software to Boot from the Roadrunner Hardware

Before you turn off power to your computer and install the Roadrunner hardware, you need to make a couple of adjustments for Roadrunner compatibility:

Instructions outlined in this section require that you directly modify your AMOS monitor, as well as your AMOS system initialization command file. These files are being modified directly to allow the computer to boot from the new Roadrunner hardware once it is installed. This is why it is so important to have a bootable tape or some other means of accessing your hard disk drive should a problem arise.

1. The high performance features incorporated into the Roadrunner hardware require more queue blocks. You need to increase the queue block parameter in the system initialization command file in order to support the Roadrunner hardware.

   Use this formula to determine your new queue block requirement:

   NEW QUEUE BLOCK REQUIREMENT = OLD QUEUE BLOCKS + (13 x THE NUMBER OF JOBS)

   For example, if the QUEUE statement in your system initialization command file is currently set to 200 and the JOBS statement is set to 50, the resulting formula would look like this:

   NEW QUEUE BLOCK REQUIREMENT = 200 + (13 x 50)

   For the example, the QUEUE statement would now be set to 850 to accommodate the Roadrunner hardware.

2. If you are booting from a SCSI disk drive or have any SCSI peripheral connected to the Roadrunner hardware, you need to define the SCSI dispatcher (described in Section 6.0) in your system initialization command file. The PIC for the SCSI dispatcher must be purchased separately from Alpha Micro.

   In order to install the dispatcher, the command:

   ```
   SCZDSP  SCZRR
   ```

   must be entered in the system initialization command file **after** the JOBALC statements, but **before** the first DEVTBL command.

For example:

```
:T
JOBS 1
JOBALC JOB1
;
TRMDEF TERM1,AM1000=0:19200,AM62A,100,100,100,EDITOR=15
VER
SCZDSP SCZRR.SYS
;
DEVTBL DSK1,DSK2
```

Once the dispatcher has been defined in your AMOS32.INI file, you must code the SCSI dispatcher to allow it to run on your specific system.

Once you enter the product installation code (PIC), the product overlay file is forever modified and will not accept a new PIC. This can be a problem if you happen to enter an incorrect PIC. As a safeguard, make a copy of the dispatcher overlay file before you do the SSD encodement. Type:

COPY SCZDSP.SAV=SCZDSP.OVR RETURN

By saving an unmodified version of the overlay file, you will be able re-enter the PIC if necessary.

To perform the SSD encodement, enter the following commands:

LOG SYS: RETURN
SCZPIC RETURN

You will be prompted for a Product Installation Code (PIC).

This PIC is a unique identifier for your system that must be purchased and obtained from Alpha Micro. Enter the PIC, carefully verifying you have entered it correctly and press RETURN.

After a brief pause, you will be returned to AMOS command level and you can proceed with the remainder of the installation. If you see the error message `?Improper SSD` after you have rebooted the computer, it probably means you have entered the PIC incorrectly.

As mentioned above, you cannot SSD encode the same overlay twice; to re-encode the dispatcher software, do this command first:

COPY SCZDSP.OVR=SCZDSP.SAV RETURN

You will now be able to re-encode the dispatcher. If after once again rebooting the computer you still receive the same error, check with your dealer to make sure the correct PIC was supplied for your computer.

3. Your AM-2000 computer boots from a monitor called AMOS32.MON. In order for the Roadrunner to boot, a new monitor must be created using a driver called SCZRR.DVR, which is compatible with the Roadrunner hardware. The boot monitor used by the Roadrunner is also called AMOS32.MON.

The Roadrunner's high performance SCSI port supports write buffering for SCSI hard disk drives. If you are going to use this feature, please read the information in Appendix B before continuing with this procedure.

Use the MONGEN program to embed the Roadrunner SCSI compatible hard disk driver into the AMOS monitor located in account [1,4].

For Example:

```
LOG SYS: RETURN

MONGEN RETURN

Input monitor name:  AMOS.MON RETURN
New disk driver: SCZRR.DVR RETURN
New language definition table name: ENGLSH RETURN
New monitor name: AMOS32.MON RETURN

SAVE AMOS32.MON RETURN
```

The monitor is now compatible with Roadrunner hardware; the computer will not boot if you press the reset button before Roadrunner is installed.

C.1.6 Roadrunner Installation Checklist

At this point in the installation, all of the following preliminary steps required to support the Roadrunner hardware should be complete:

1. If you're using an AM-645 Exabyte tape drive or a Tandberg AM-625, AM-626, or AM-627 tape drive, make sure you read the information on firmware requirements located earlier in this document in Section 5.1.

2. A Roadrunner compatible operating system and corresponding Product Support Software Kit tape (if applicable) should have been downloaded onto your computer's hard disk drive.

Once you have completed all the steps outlined in this appendix, you are ready to install the Roadrunner hardware.

APPENDIX D

ROADRUNNER AM-174 PROGRAMMING INFORMATION

D.1 ROADRUNNER AM-174 PROGRAMMING INFORMATION

The MC68040 processor used on the AM-174 Roadrunner board contains more internal instruction cache (4096 bytes) than earlier MC68030-based processors. Increased internal cache is one of the features which contributes to the improved performance of the Roadrunner 040 board; however, if your software does not properly manage this instruction cache, it could be adversely affected.

When the instruction cache is enabled—as it would be during normal system operation—any memory location which is executed by the processor is loaded into the instruction cache. This improves performance for those cases where the same location is executed again, since the instruction will be read from cache instead of slower main memory.

D.1.1 The Problem and Why It's A Problem

The problem arises when that same memory location, which has now been loaded into cache, is modified. Because data operations—such as the MOV instruction—do not update the instruction cache, when your program next executes the memory location, it may read the old contents, which are still in the instruction cache, rather than pulling the instruction from main memory where it was updated. This is known as self-modifying code.

In this context, self modifying code is any code which is written to memory as data, such as when read from disk to memory, and then executed as instructions. AMOS handles the most common cases, such as reading data from disk or during the FETCH monitor call, but cannot handle cases in your software where you are handling program overlays or building instructions on the fly. Such code is often present in "trick" code like that used to perform SSD-based software protection, although it may be present anywhere.

This issue was present on 68030 based systems, but the limited cache size on that processor made it a much smaller problem. Tricks to flush the cache that worked on the 68030, such as forcing a context switch, will probably not work reliably on the 68040.

D.1.2 What You Must Do..

The only sure way to address this issue is to flush the instruction cache after loading instructions into memory, but before executing those instructions. Because the method by which you flush the cache is different on the various 680x0 processors, you will need to add code specific to the 68040.

You must be certain to handle the different processors individually. Failure to do so may result in inadvertently disabling certain processor features. For example, trying to flush the 68040 cache using the 68030 method will result in the 68040's instruction cache being disabled. This will seriously degrade system performance.

To test to see if a program is executing on a 68040, use the following code fragment:

```
MOV       SYSTEM,D7           ; get the system flags
AND       #SY$M40,D7          ; is the 040 bit set?
BNE       yes we're on a 040! ; yes - take the branch
```

To simply flush the cache, use the following code fragment:

```
SUPVR                         ; enter supervisor mode
CINVA                         ; invalidate cache
LSTS      #0                  ; return to user mode
```

To turn off the instruction cache, as is needed in some cases, use the following code:

```
SUPVR                         ; enter supervisor mode
SVLOK                         ; ensure interrupts are off
CLR       D7                  ; clear the CACR
MOVEC     D7,CACR             ; flags
LSTS      #0                  ; return to user mode and enable
                              ; interrupts again
```

To turn the instruction cache back on, use the following:

```
SUPVR                         ; enter supervisor mode
SVLOK                         ; turn off interrupts
CINVA                         ; invalidate cache
MOV       #^H08000,D7         ; set the ICACHE
MOVEC     D7,CACR             ; enable bit
LSTS      #0                  ; return to user mode and enable
                              ; interrupts again
```

Remember to turn the instruction cache back on! If you don't, system performance will be seriously impaired.

In versions of M68 appearing in earlier AMOS releases, the instructions MOVEC°D7,CACR and CINVA were not implemented. With the release of AMOS 2.2C, which includes M68°2.0(181), these instructions are now supported. Examples of their use are shown above.

D.1.3°One More Caution

The 68040 also has internal registers called Transparent Translation Registers (also present on the 68030) that you must be sure not to modify. This is far less common than instruction cache issues, but will cause system failure if modified.

D.1.4°New Cache Control Program

Some existing third party software packages making use of self modifying code, which worked fine with the 68030, will no longer work with the 68040 based Roadrunner. This is due to the 68040's large (4096 byte) instruction cache.

The ideal way to handle this problem is to have the software developer either not use self modifying code, or to properly disable and enable the instruction cache as required. However, you may find yourself in a position where a third party software developer is no longer available, or is unwilling to make the necessary changes in a timely fashion.

As a solution to this problem, AMOS 2.2C and 1.4C include a new program called COMPAT.LIT. This program works in conjunction with an ASCII file, which you create using AlphaVUE, called COMPAT.DAT. Within COMPAT.DAT, you list programs that can only be run with the 68040's instruction cache disabled.

For example, the COMPAT.DAT file shown below would disable caching for the three programs listed:

```
SCHDLP
INIJOB
;This is a comment
FAXUIT
```

Since there are no Alpha Micro programs that require the instruction cache to be disabled, the program names used in the example are fictitious.

By using COMPAT, you can disable the instruction cache for selected programs, while allowing other users on the system to run non-selected programs with the instruction cache enabled.

Once you have created your COMPAT.DAT file, you can run the COMPAT program one of two ways:

From the AMOS prompt, you can type:

COMPAT COMPAT.DAT RETURN

or you can add this same command into your system initialization command file.

If you simply enter the command:

COMPAT RETURN

you will get a display showing the list of programs that have been selected for the special cache control. Also, you will get some statistical information in the form of the total number of CPU context switches which are non-cached, and the percentage of the non-cached context switches that each of the selected programs caused. A display like the one shown below, which has a very high percentage of non-cached CPU context switches, would indicate that system performance is hindered, because very little use of the instruction cache it taking place.

```
The following programs run with internal cache disabled:

  STIC    (active in 88.7% of total context switches, 99.6% of non-cached)
  FAXUIT  (active in  0.2% of total context switches,  0.3% of non-cached)

A total of 89.0% of context switches were non-cached
```

If you are having problems getting a certain software package to run on your Roadrunner, try adding the program to the list of programs in the COMPAT.DAT file. You may find the program will run with the instruction cache disabled.